Principal Plant and General Offices
111 North River Road
P.O. Box 207
North Aurora, IL 60542-0207

Toll Free: 1-800-323-5664
Phone: 1-630-897-8489
Fax: 1-630-897-0573
Web Site: www.belson.com

6', 8' & ADA ACCESS ALUMINUM PICNIC TABLE

Thank you for buying a BELSON OUTDOORS quality product.

INDEX

1) FRAME KIT CONTENTS
2) PLANK KIT CONTENTS AND PLANK REFERENCES
3) ALUMINUM 6', 8' & ADA ASSEMBLY INST.
4) ALUMINUM 6', 8' & ADA ASSEMBLY INST. (CONT.)

GS-AF KIT CONTENTS:

(1) SUPPORT BAR
708404



(1) HARDWARE BAG
702402

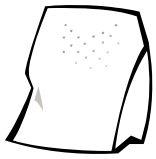

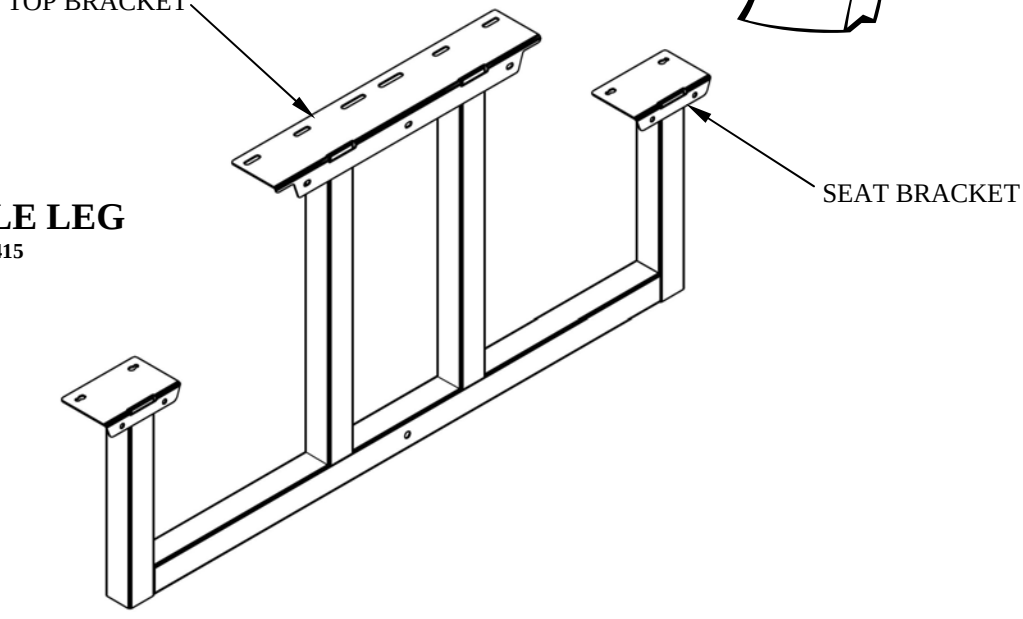

(2) TABLE LEG
708415

BELSON ALUMINUM PLANK KIT

PLANK KIT CONTENTS:

ALUMINUM PLANK (5)

TOP VIEW

SIDE VIEW

6' ALUMINUM			8' ALUMINUM		
KELLY GREEN	TAN	ANODIZED	KELLY GREEN	TAN	ANODIZED
702171	702172	702173	702161	702162	702163

BOARD SIZE DEPENDS ON TABLE/KIT MODEL, EITHER 6' OR 8' SEE INSTRUCTIONS FOR ASSEMBLY.

ANODIZED ALUMINUM SEAT END CAP (4) 702032

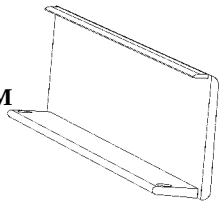

ANODIZED ALUMINUM TABLE TOP END CAP (2) 702033

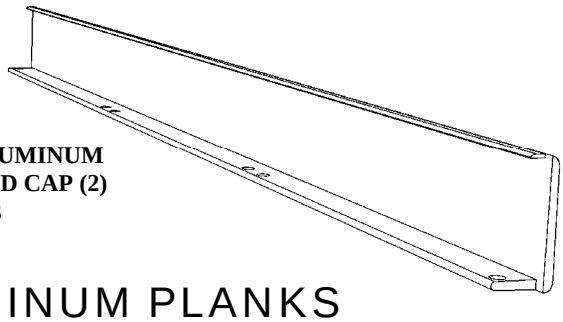

REFERENCES FOR ALUMINUM PLANKS

TOOLS NEEDED: pencil or marker and tape measure or ruler.

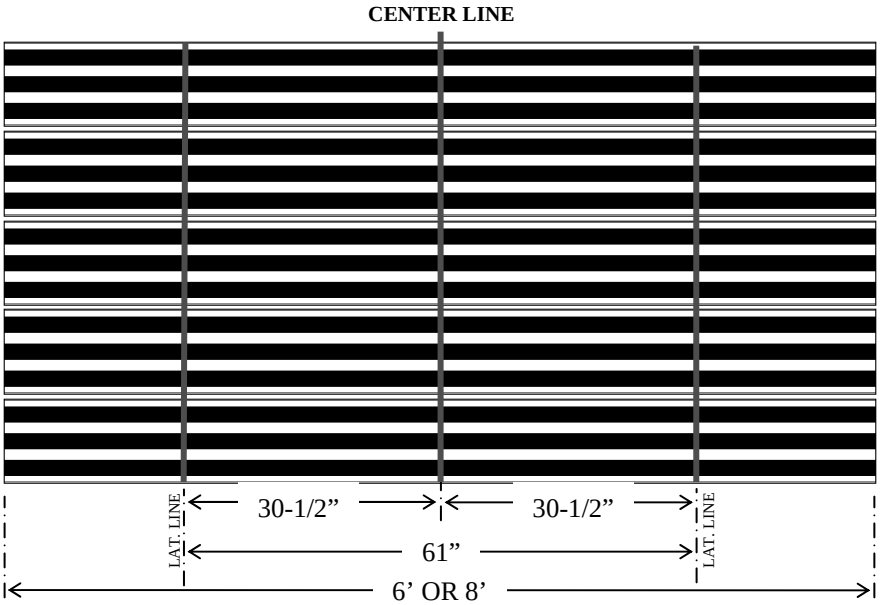

DRAWING REFERENCE LINES:

Lay all 5 Planks side by side on a non-abrasive flat surface that will not damage the aluminum with the plank legs facing up as shown (bottom side up).

Draw a *Center Line* across all 5 Planks measuring equal distance from side edges. Then draw two *Lateral Lines* 30-1/2" parallel from *Center Line* on all boards (this will be your reference for bracket locations).

IDENTIFY PLANK PARTS AND CLIP LOCATIONS

CLIPS MOUNTED ON SIDE CHANNELS

These locations are for *Lateral Components*: When attaching Seat / Seat Brackets and Top "L" Brackets to Aluminum Planks.

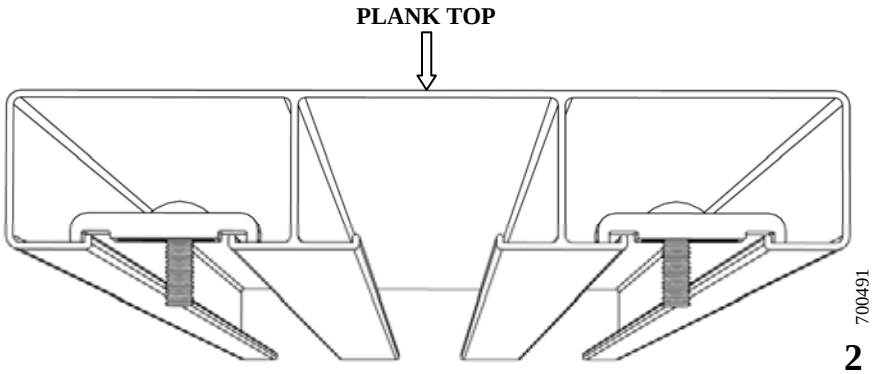

700491

6’, 8’ & ADA ACCESS ALUMINUM PICNIC TABLE ASSEMBLY INSTRUCTIONS

TOOLS REQUIRED: 1/2”, 9/16” & 3/4” wrenches and powered screw driver or drill with Phillips tip No. 2.

1.- Lay 3 Planks aligned side by side on a non-abrasive flat surface that will not damage the aluminum with legs facing up.
2.- Place 2 Table Legs with Top Brackets aligned with the flat edge along the reference *Lateral Lines*. Attach each Bracket with 6 clips and 1” carriage bolts mounted in Plank’s side channels as shown. Hand fasten nuts. (see page 2 for clip locations).
3.- Attach Table Top End Caps using 3/4” self-drilling screws. Tighten firmly.

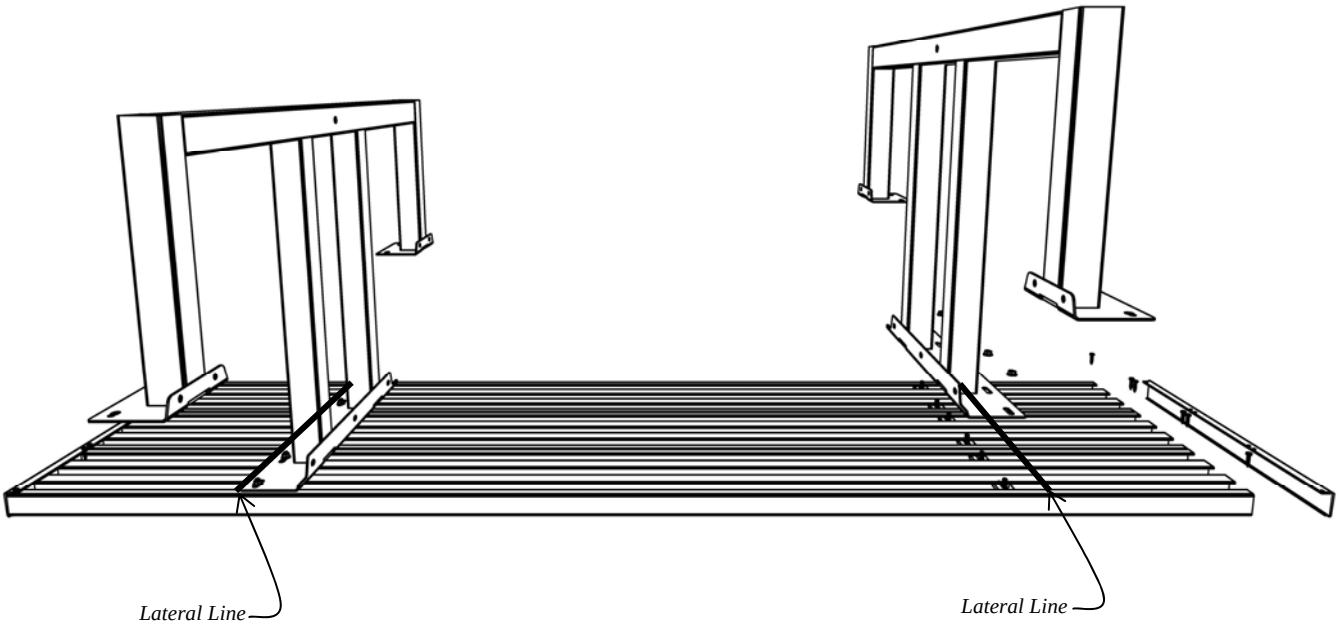

4.- Remove temporary 1/2”-13 x 1” bolts from support bar and discard.
5.- Using two 1/2”-13 x 3 1/2” bolts with flat washers, attach support bar to table legs.
6.- Make sure Planks and Brackets are aligned. Then hand tighten <u>all</u> nuts.



700491

CONTINUE ON PAGE (4)…

6’, 8’ & ADA ACCESS ALUMINUM PICNIC TABLE ASSEMBLY INSTRUCTIONS (CONTINUED)

TOOLS REQUIRED: 9/16”, 1/2”, 3/4” wrenches and powered screw driver or drill with Phillips tip No. 2.

7.- Lay 2 planks on a non-abrasive flat surface that will not damage the aluminum with legs facing up.
8.- Attach seat end caps using 3/4” self-drilling screws.

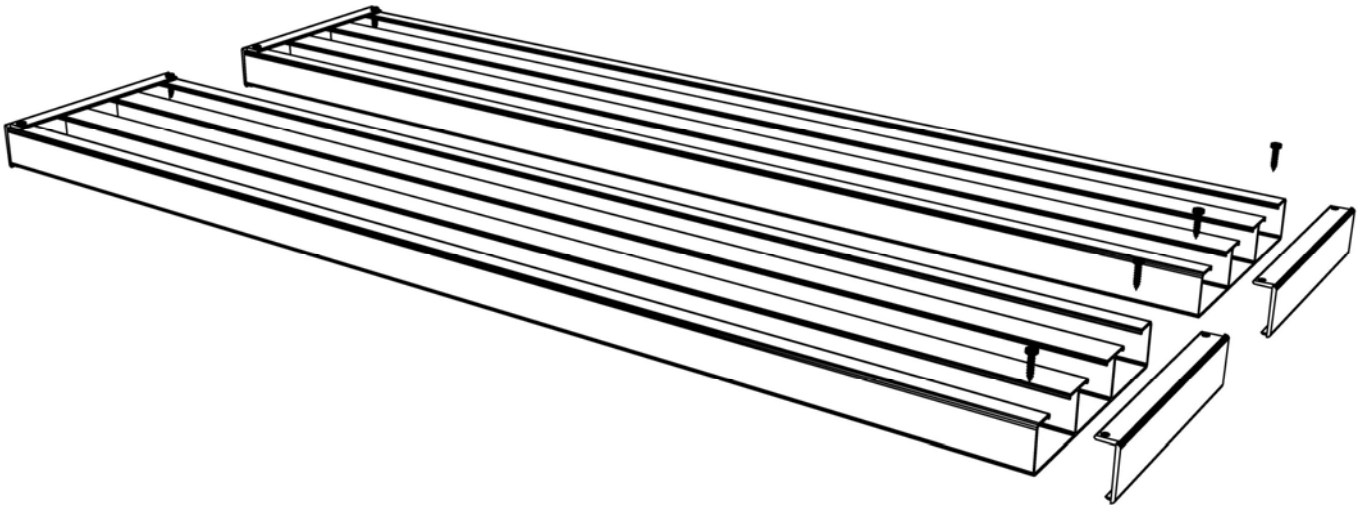

9.- Flip the partial table assembly into an upright position. Use care when lifting table.
10.- Attach Seat Planks to Seat Brackets with the flat edge along the *Lateral Lines* as shown. Attach using clips and 1” carriage bolts mounted in plank’s side channels. Tighten firmly. (see page 2 for clip locations)
11.- **Tighten <u>all</u> nuts and screws firmly.** Including 1/2”-13 x 3 1/2” bolts from step 4.
12.- The Picnic Table is finished.

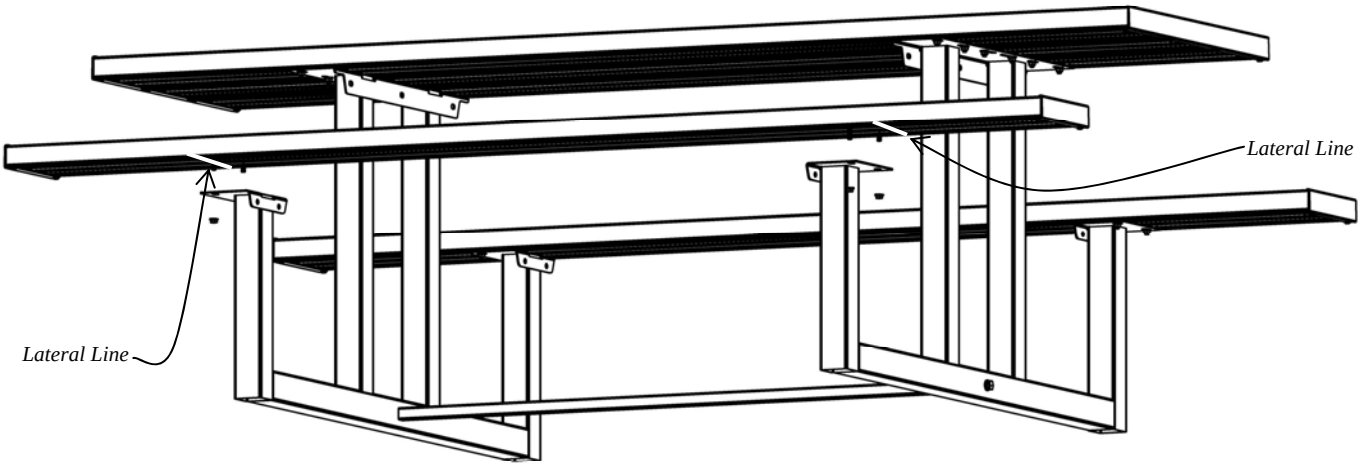

<u>Note</u>: For ADA access tables, use 6’ planks on the seats and 8’ planks for the table top.

700491